Plan view Project number: **189/1/3**
frame

Project: **BKD 3045**
16/08/2018

Alternative: **Kitchen - Final** Scale:**Fit to**

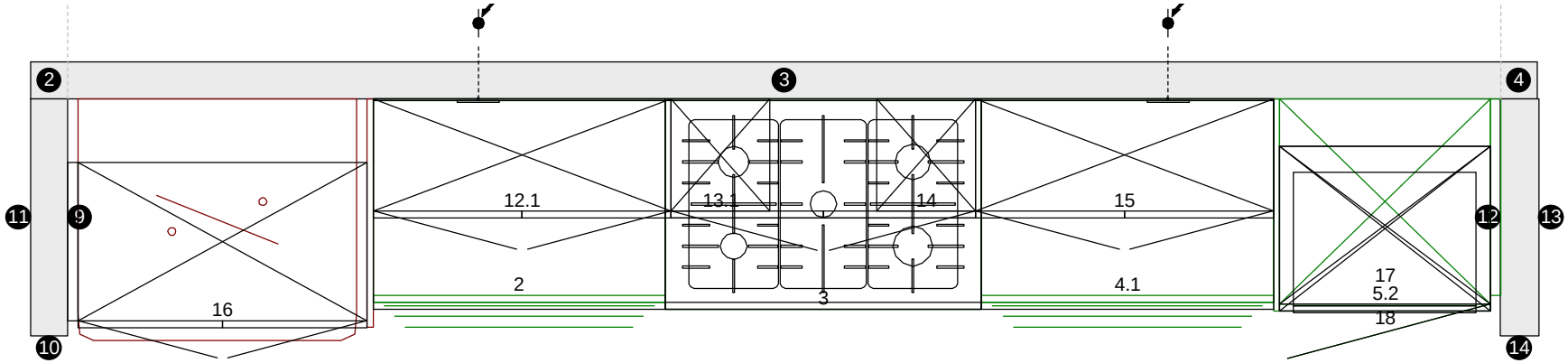

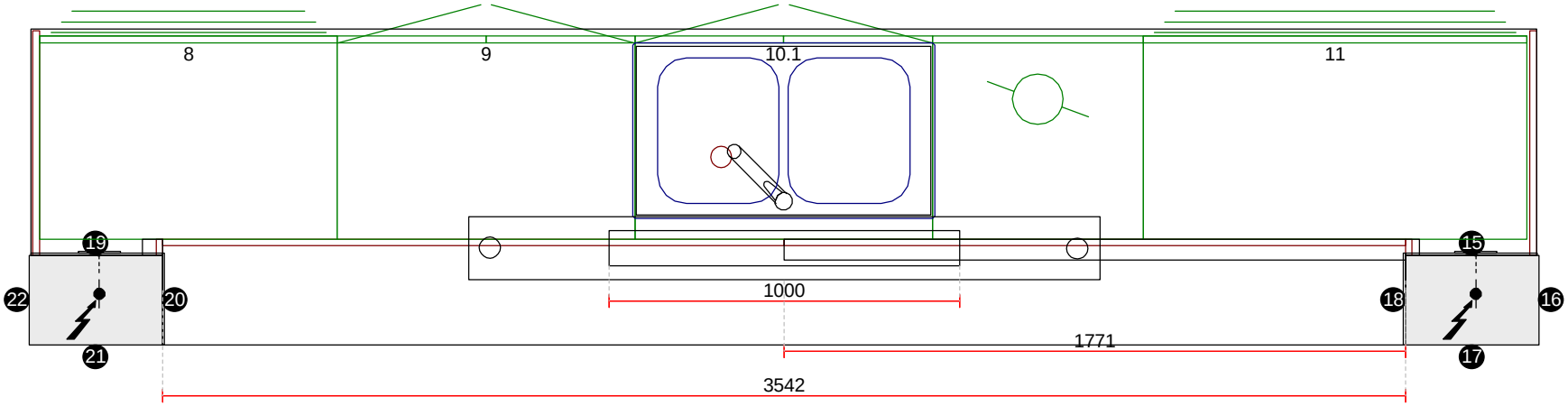

This design is copyrighted. To forward it to a third party or copying it without prior agreement is prohibited. The drawing is only an indication of the planned installation.

Beautiful Kitchen Designs

where Service & Quality preside

Perspective drawing Project number: **189/1/3**

Project: **BKD 3045**
16/08/2018

Alternative: **Kitchen - Final**

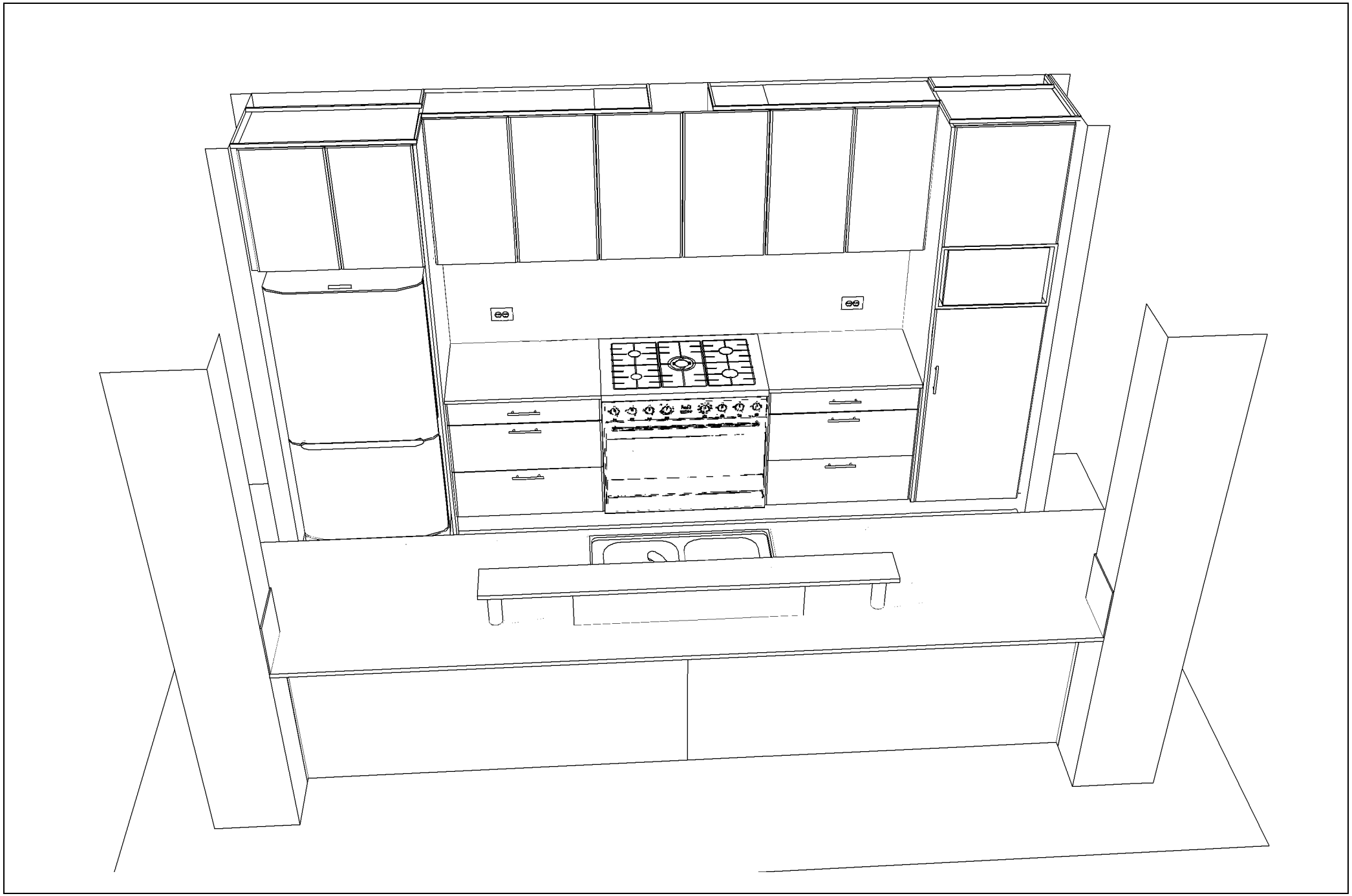

This design is copyrighted. To forward it to a third party or copying it without prior agreement is prohibited. The drawing is only an indication of the planned installation.

Perspective drawing Project number: **189/1/3**

Project: **BKD 3045**
16/08/2018

Alternative: **Kitchen - Final**

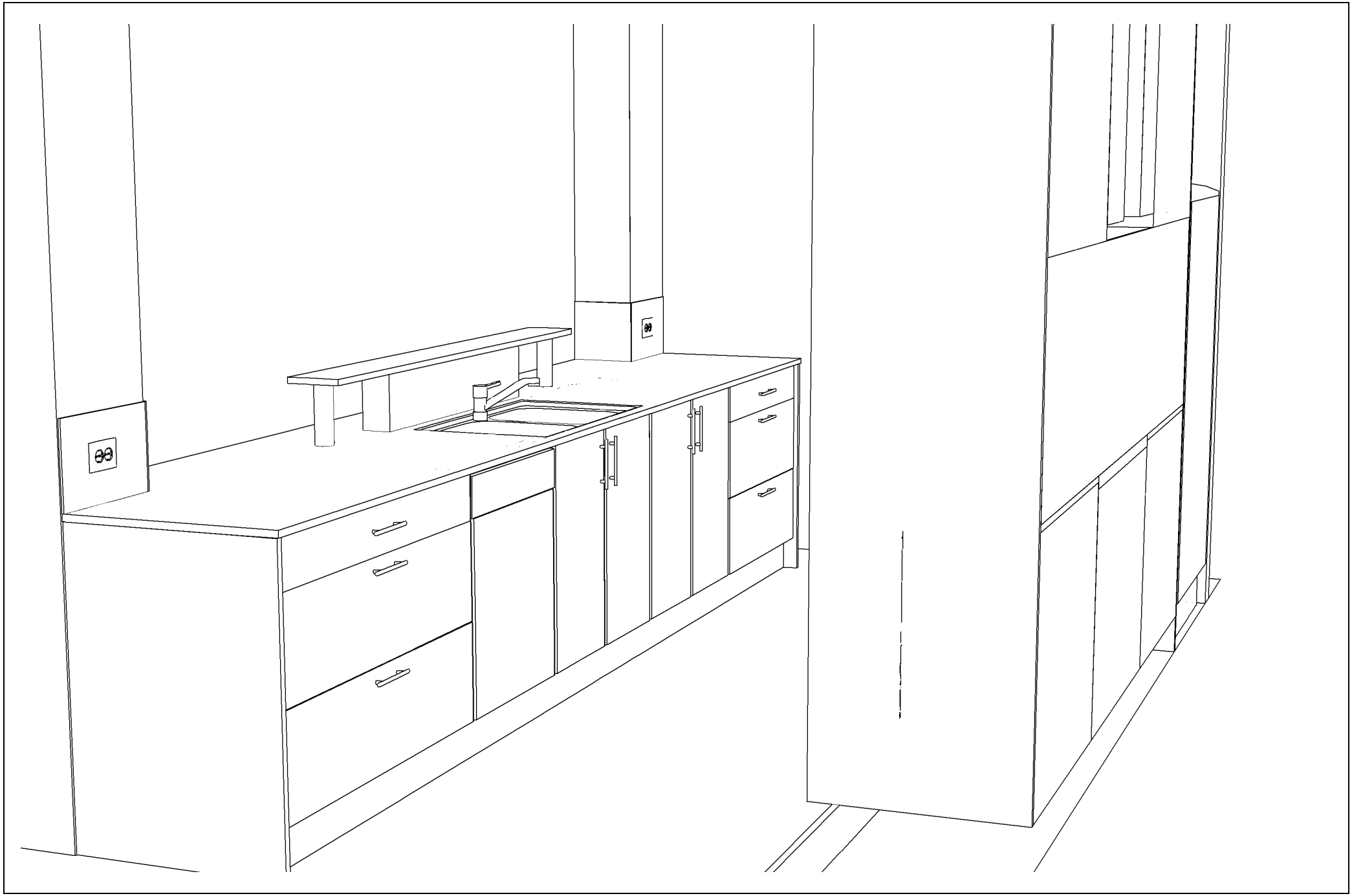

This design is copyrighted. To forward it to a third party or copying it without prior agreement is prohibited. The drawing is only an indication of the planned installation.

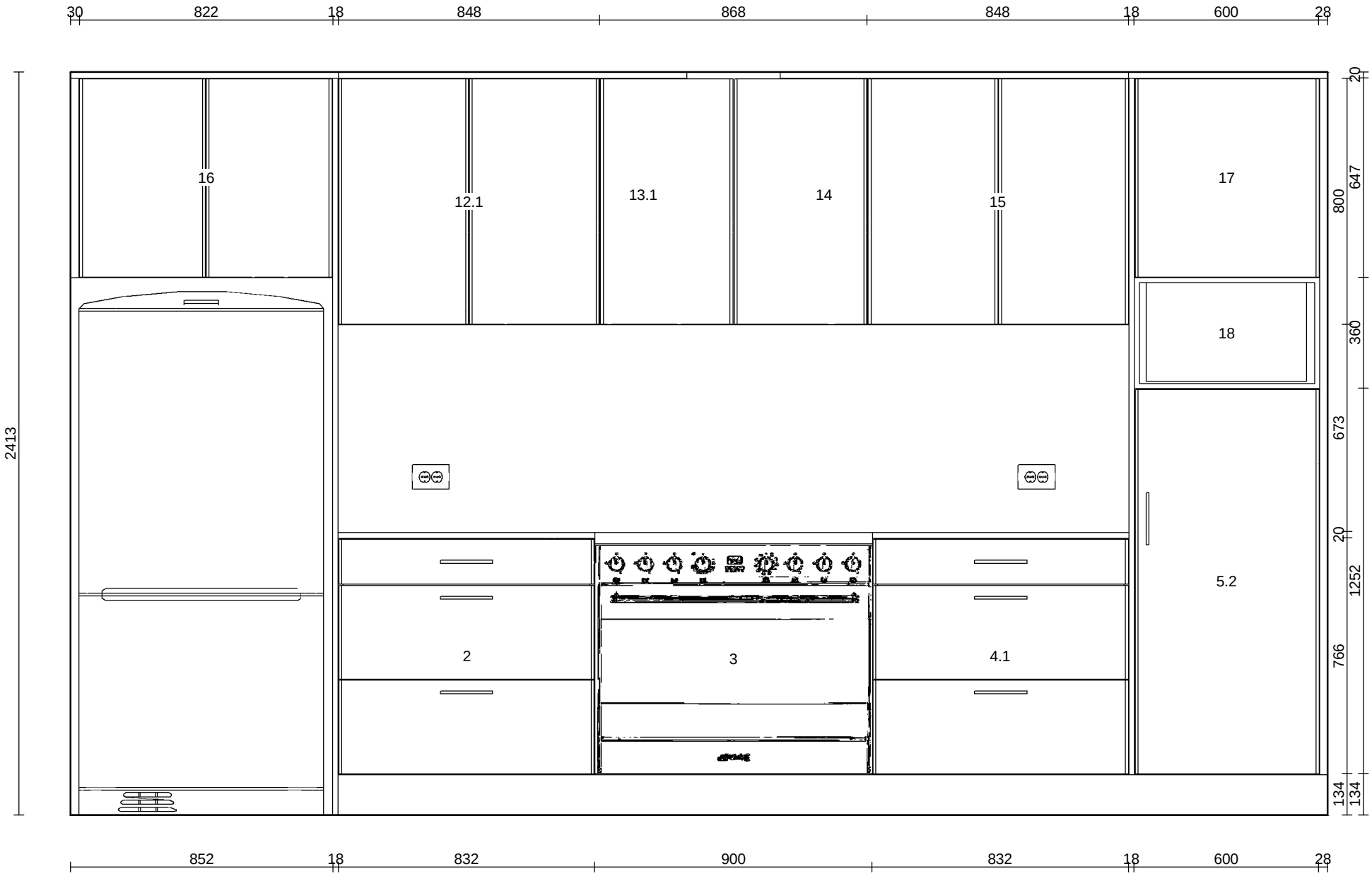

This design is copyrighted. To forward it to a third party or copying it without prior agreement is prohibited. The drawing is only an indication of the planned installation.

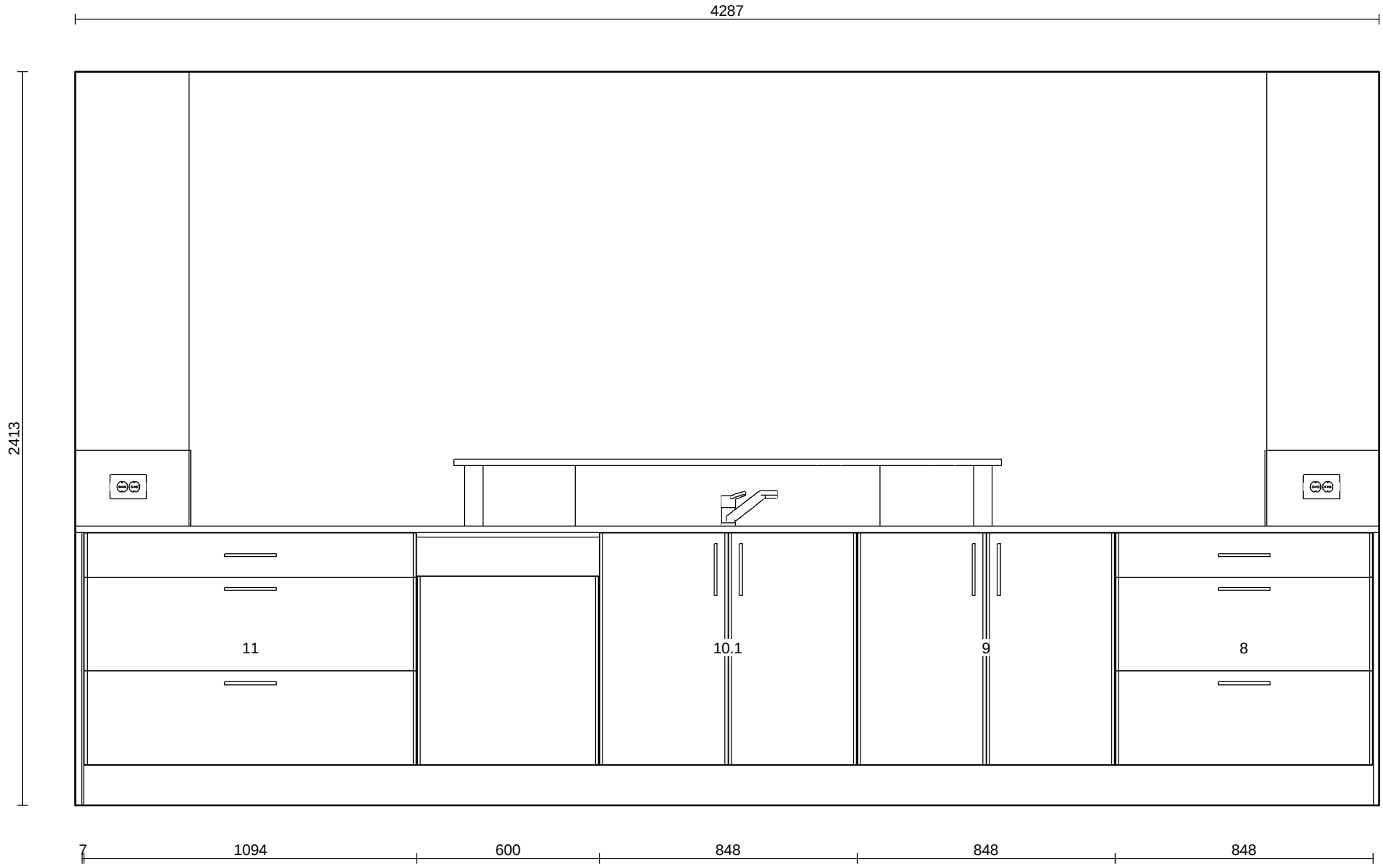

This design is copyrighted. To forward it to a third party or copying it without prior agreement is prohibited. The drawing is only an indication of the planned installation.